Draw a sailboat below by following the numbered pictures.

1.

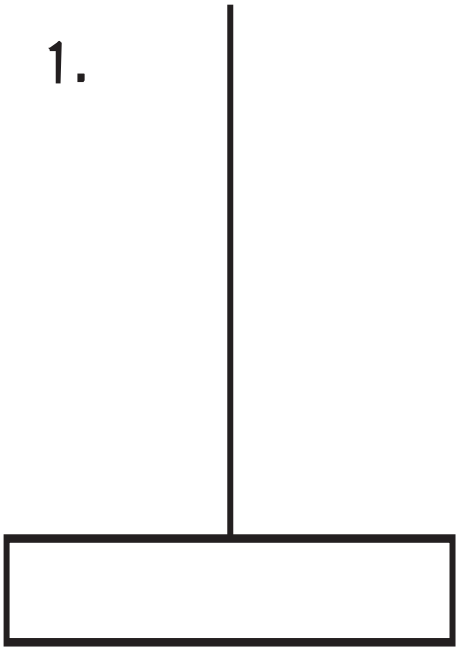

2.

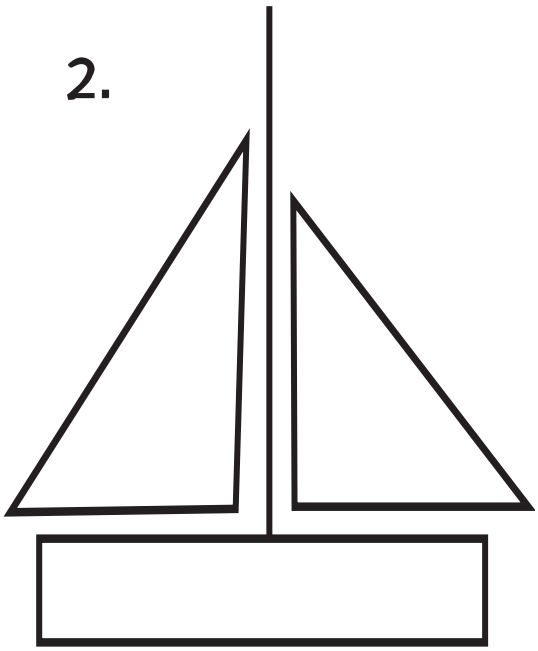

3.

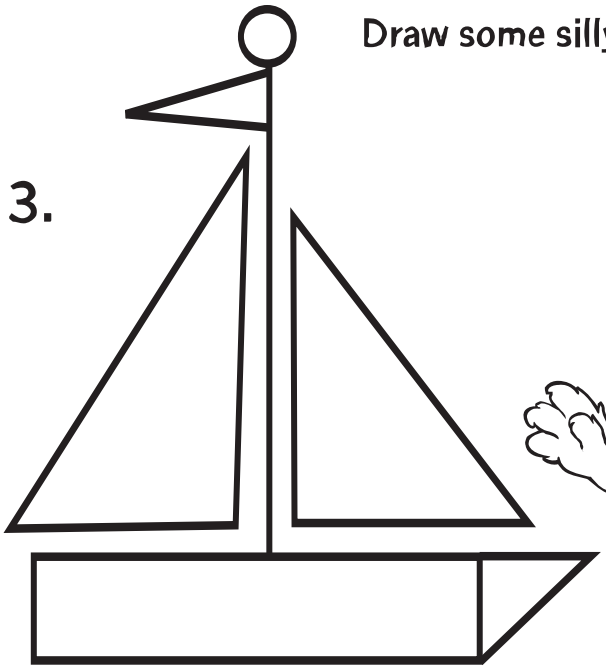

Draw some silly fish swimming around the boat.

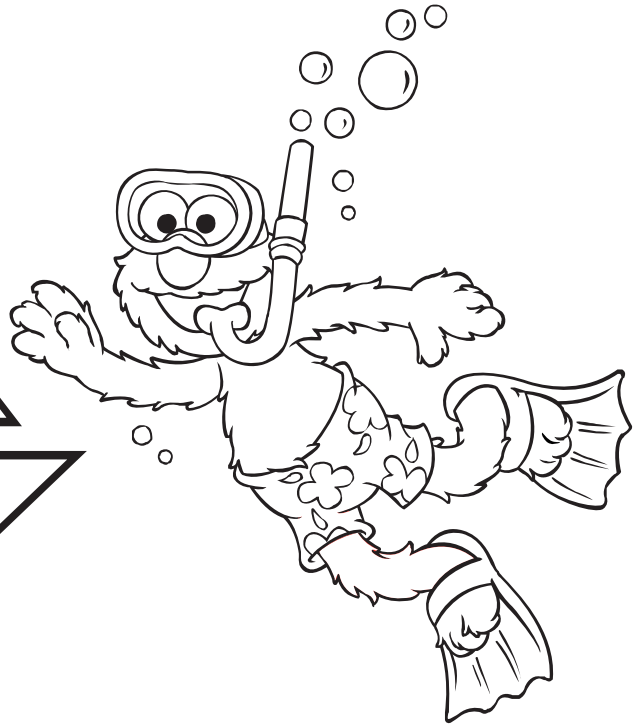

© 2018 Sesame Workshop. “Sesame Street”®, and associated characters, trademarks, and design elements are owned and licensed by Sesame Workshop. All Rights Reserved.

© 2018 Sesame Workshop. “Sesame Street”®, and associated characters, trademarks, and design elements are owned and licensed by Sesame Workshop. All Rights Reserved.

Connect the dots to see Ernie's boat.

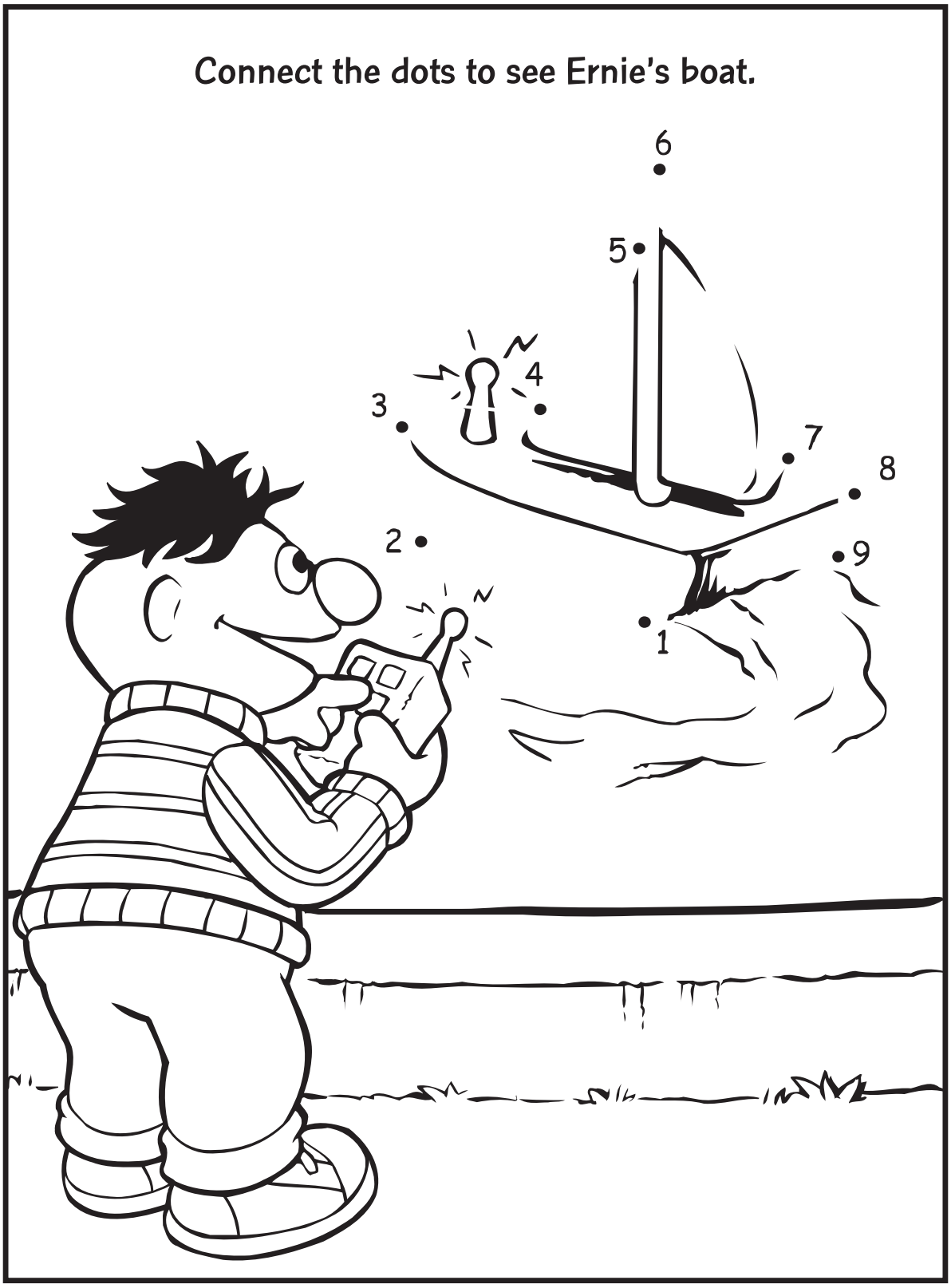

© 2018 Sesame Workshop. "Sesame Street"®, and associated characters, trademarks, and design elements are owned and licensed by Sesame Workshop. All Rights Reserved.

© 2018 Sesame Workshop. “Sesame Street”®, and associated characters, trademarks, and design elements are owned and licensed by Sesame Workshop. All Rights Reserved.

© 2018 Sesame Workshop. “Sesame Street”®, and associated characters, trademarks, and design elements are owned and licensed by Sesame Workshop. All Rights Reserved.